ELEVATIONS

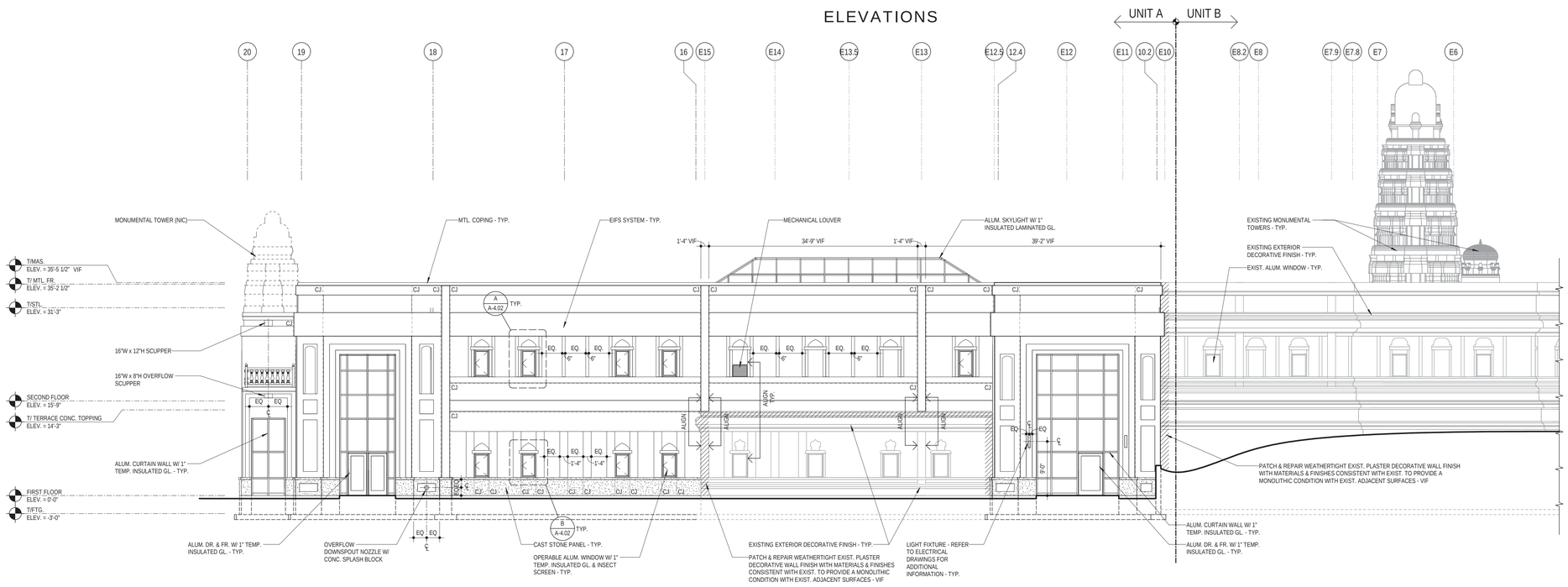

1 NORTH ELEVATION

1/8" = 1'-0"

0 2 4 8 16 24

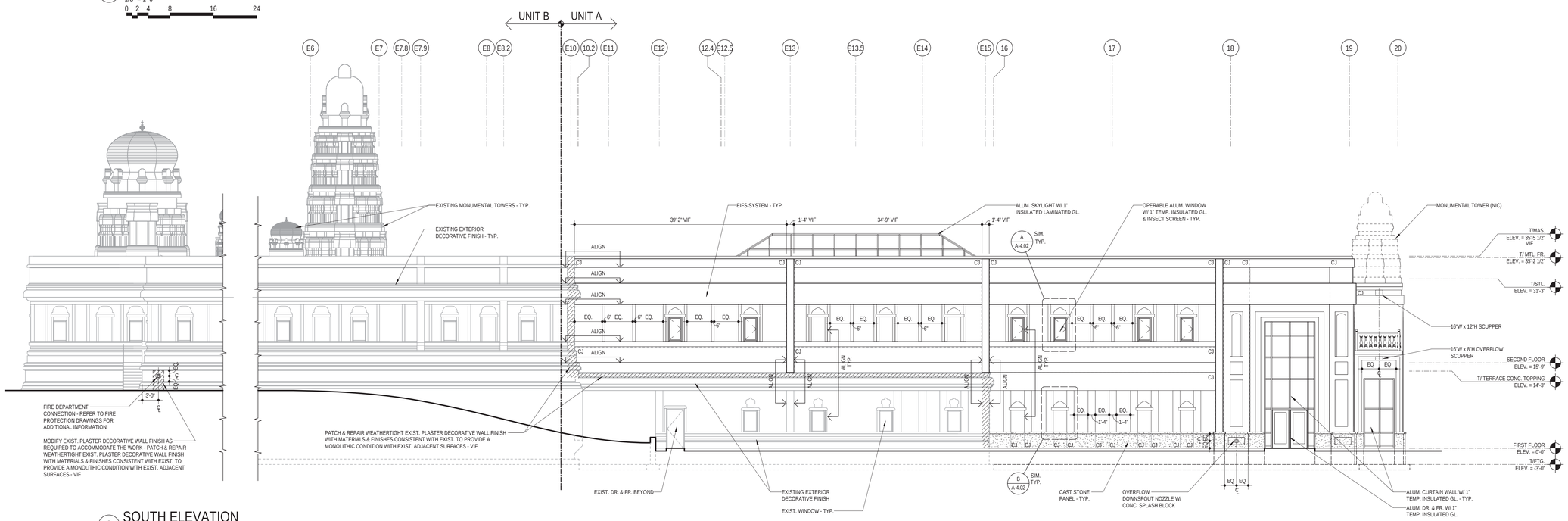

2 SOUTH ELEVATION

1/8" = 1'-0"

Elevation Data Table: Elevations		
Description	Value	Unit
a) Building Height in feet (typical)	32.50	feet
b) Total Building Square Footage (typical)	48,410.00	Square Feet
c) First Floor Building Square Footage (typical)	27,140.00	Square Feet
d) Number of building stories (typical)	2.00	Square Feet
e) Exterior Material List (including colors) for all buildings and accessory strutures:		
White Plaster, White EIFS, Dark Grey Cast Stone, Clear and Bronze Tinted Glass with White and Bronze Aluminum Frames		

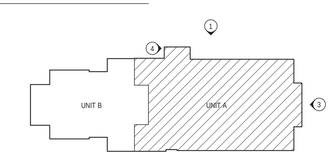

KEY PLAN

PRELIMINARY

JANUARY 18, 2021

DO NOT USE FOR CONSTRUCTION PURPOSES

HEALY BENDER PATTON & BEEN

ARCHITECTS

4040 Helene Avenue
Naperville, IL 60564
T 630.904.4300

www.healybender.com

ELEVATIONS

ADDITION TO BALAJI TEMPLE

AURORA, ILLINOIS

FOR

SRI VENKATESWARA (BALAJI) TEMPLE
AURORA, KANE COUNTY, ILLINOIS

REVISIONS

NO.	DATE	DESCRIPTION

PROJ. NO. 3-220-19

DRAWN BY TLM

DATE 00-00-0000

SHEET NO.

A-4.01

OF 1

EXTERIOR ELEVATIONS

COPYRIGHT © 2021 HEALY BENDER PATTON & BEEN ARCHITECTS

ELEVATIONS

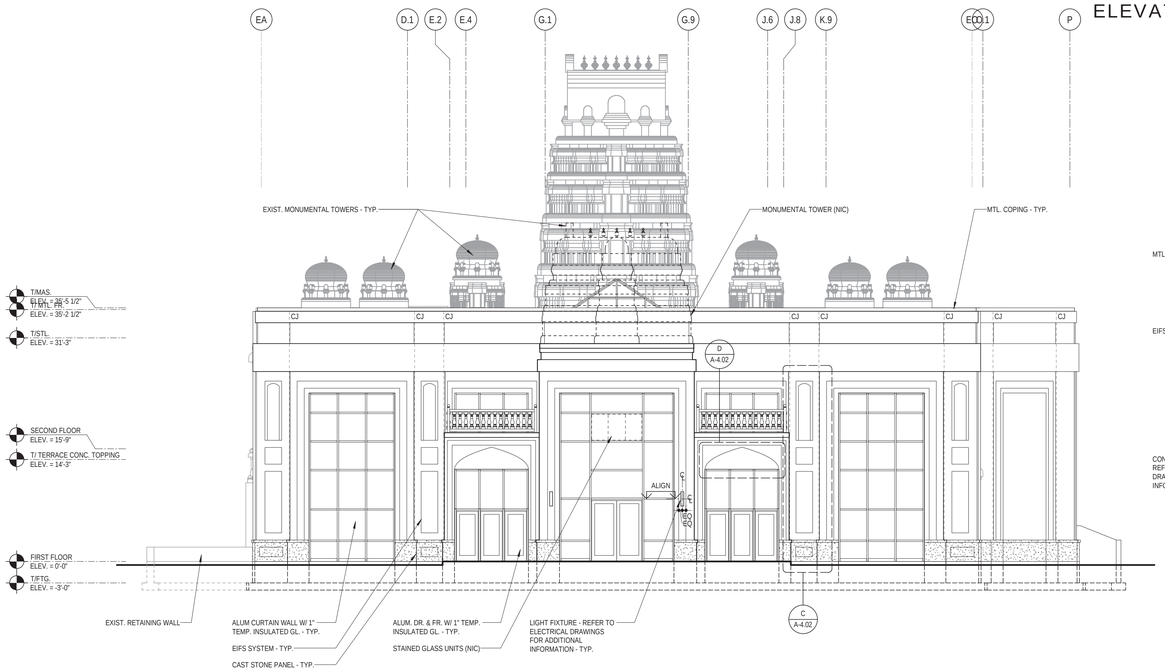

3 EAST ELEVATION

1/8" = 1'-0"

0 2 4 8 16 24

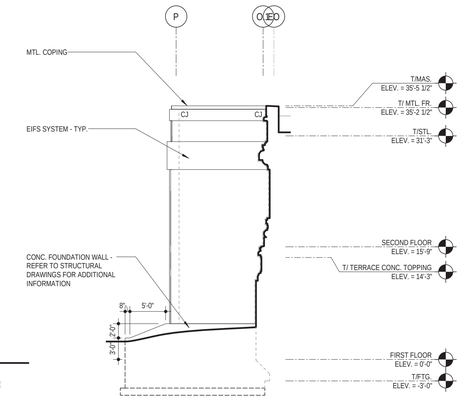

4 WEST ELEVATION

1/8" = 1'-0"

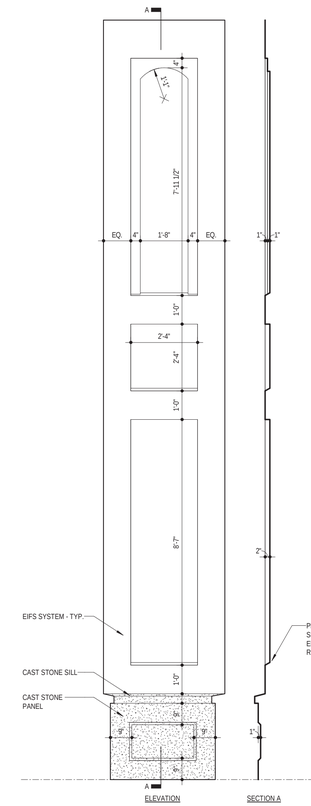

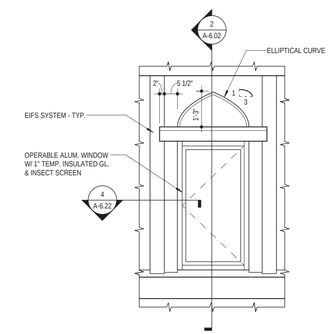

A TYP. SECOND FLOOR WINDOW RELIEF DETAIL

A-4.02 1/2" = 1'-0"

0 1 2 4 6

C TYP. RELIEF DETAIL

A-4.02 1/2" = 1'-0"

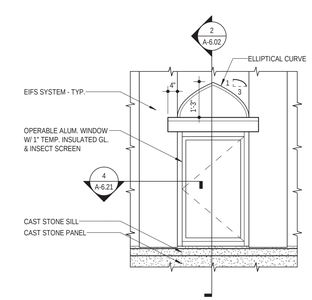

B TYP. FIRST FLOOR WINDOW RELIEF DETAIL

A-4.02 1/2" = 1'-0"

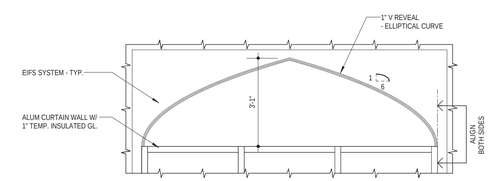

D TYP. ARCH REVEAL

A-4.02 1/2" = 1'-0"

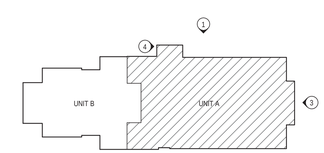

KEY PLAN

PRELIMINARY

JANUARY 18, 2021

DO NOT USE FOR CONSTRUCTION PURPOSES

NORTH

Elevation Data Table: Elevations		
Description	Value	Unit
a) Building Height in feet (typical)	32.50	feet
b) Total Building Square Footage (typical)	48,410.00	Square Feet
c) First Floor Building Square Footage (typical)	27,140.00	Square Feet
d) Number of building stories (typical)	2.00	Square Feet
e) Exterior Material List (including colors) for all buildings and accessory strutures:		
White Plaster, White EIFS, Dark Grey Cast Stone, Clear and Bronze Tinted Glass with White and Bronze Aluminum Frames		

HEALY BENDER PATTON & BEEN

ARCHITECTS

4040 Helene Avenue
Naperville, IL 60564
T 630.904.4300

www.healybender.com

ELEVATIONS

ADDITION TO BALAJI TEMPLE

AURORA, ILLINOIS

FOR

SRI VENKATESWARA (BALAJI) TEMPLE
AURORA, KANE COUNTY, ILLINOIS

REVISIONS

NO.	DATE	DESCRIPTION

PROJ. NO. 3-220-19

DRAWN BY TLM

DATE 00-00-0000

SHEET NO.

A-4.02

OF

EXTERIOR ELEVATIONS, EIFS ELEVATIONS, AND DETAILS

COPYRIGHT © 2021 HEALY BENDER PATTON & BEEN ARCHITECTS